Impedance HID ballast for mercury lamp (Aluminum coil)

HUAFENG mercury Ballasts are characterized by an inner-installed resettable thermal protector with high sensitivity. The action temperature is 160℃±5℃ and the reset temperature range is from 80℃ to 125℃.

absolutely under the standards of GB19510.1, 19510.9 and IEC61347,

certificated by CCC、ENEC、VDE、TUV and CE

Adaptable power：80W-400W mercury lamp

Recommended lamp：GE、OSRAM mercury lamp

Teminal:Screw teminal

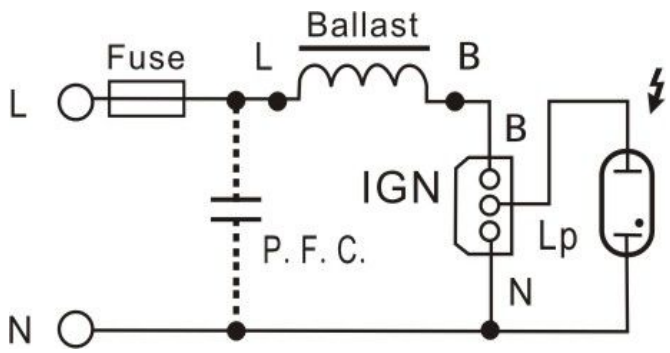

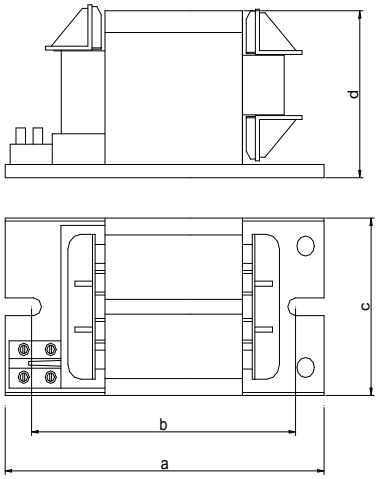

	（A）	（V）	（W）		tw	Cp	（kg）	Size（mm）					（mm）
Model	Current	Voltage	Lamp	Δt K		μ F	Weight	a	b	c	d	QTY/Carton	Carton Size
MIB80	0.8	220V～240V	MI80W	70	130	8	1.08	117	110	60	52.5	8	275*262*82
MIB125	1.15	220V～240V	MI125W	70	130	12	1.34	117	110	60	52.5	8	275*262*82
MIB175	1.5	220V～240V	MI175W	70	130	18	1.77	125	112	75	65	6	275*255*94
MIB250	2.15	220V～240V	MH250W	70	130	18	1.95	125	112	75	65	6	275*255*94
MIB400	3.25	220V～240V	MH400W	70	130	25	2.84	170	155	75	65	4	320*175*94